Operating Temperature:
-55ºC to +125ºC

Operating Voltage:
50 VDC

Rated Current:
15 Amperes maximum.

Peak Transient Voltage:
150 VDC (10µsec) @ +25ºC.

Dielectric Strength:
100 VDC @ +25ºC, 50 mA maximum charging current.

Insulation Resistance:
170 megohms minimum with 50 VDC, 50 mA maximum charging current, @ +25 after 2 minutes.

Insertion Loss:
At -55ºC to +125ºC, the insertion loss will decrease a maximum of -3 dB from the +25ºC value.

Military Specifications:
Meets or exceeds the applicable parameters of MIL-PRF-15733 and MIL-PRF-28861.

Housing (Hermetically Sealed):
Electro-tin-lead plated, hot solder dipped, or as specified.

Recommended Torque:
48 inch/oz. maximum.

Marking:
WEMS, part number, Federal Code identification, voltage, current and date code.

High Performance (50 VDC Applications)

FIG 1 Epoxy Seal

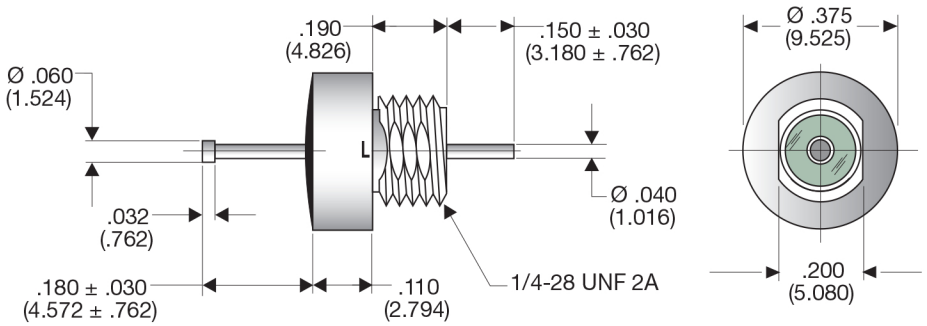

FIG 2 Hermetic Seal

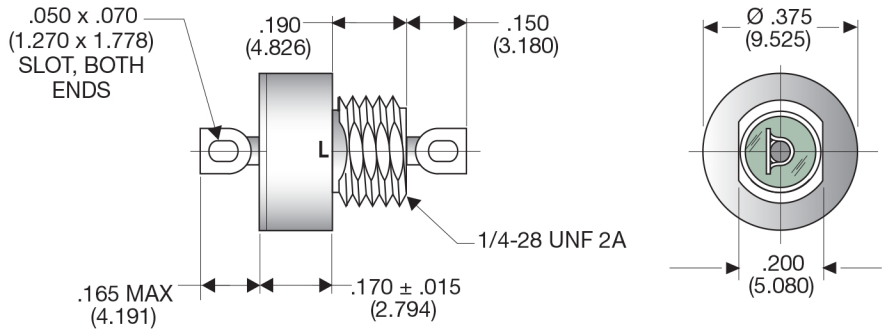

Tolerance: ± .010 (±.254 mm) unless otherwise specified.
*All units supplied with internal tooth lockwasher and hex nut.
For further details see page 6.
Dimensions are inches (mm in parantheses).

"L" Type Network
50 VDC

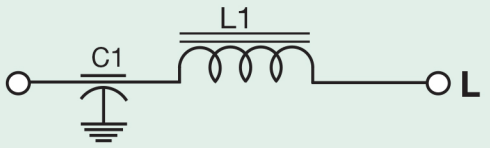

PART NUMBER	CAPACITANCE µF +100%, -0%	RESISTANCE DC MAX. (Ω)	FIG	MINIMUM INSERTION LOSS (Db) At +25ºC IN ACCORDANCE WITH MIL-STD-220[1,2]						
				30 kHz	150 kHz	300 kHz	1 MHz	10 MHz	100 MHz	1.0 GHz
FA-103-MAC	1.4	0.0025	1	15	28	33	44	60	60	70
FA-103-MAB	1.4	0.0025	2	15	28	33	44	60	60	70

1 Insertion loss measurements shall be made under full load over the frequency range of 1.0 MHz to 10 MHz. Insertion loss measurements above this frequency range under no load.
2 The insertion loss requirements between any two adjacent specified frequencies shall be that of the lower of the two frequencies in order to accommodate resonant dips.
* Part numbers were previously specified as "FC 103-MAX" and have been amended to "FA" in lieu of "FC". FC part numbers were designated for Z5U dielectric material for the ceramic discoidal element and WEMS does not use this unstable material in any of our catalog filters or any custom filters.